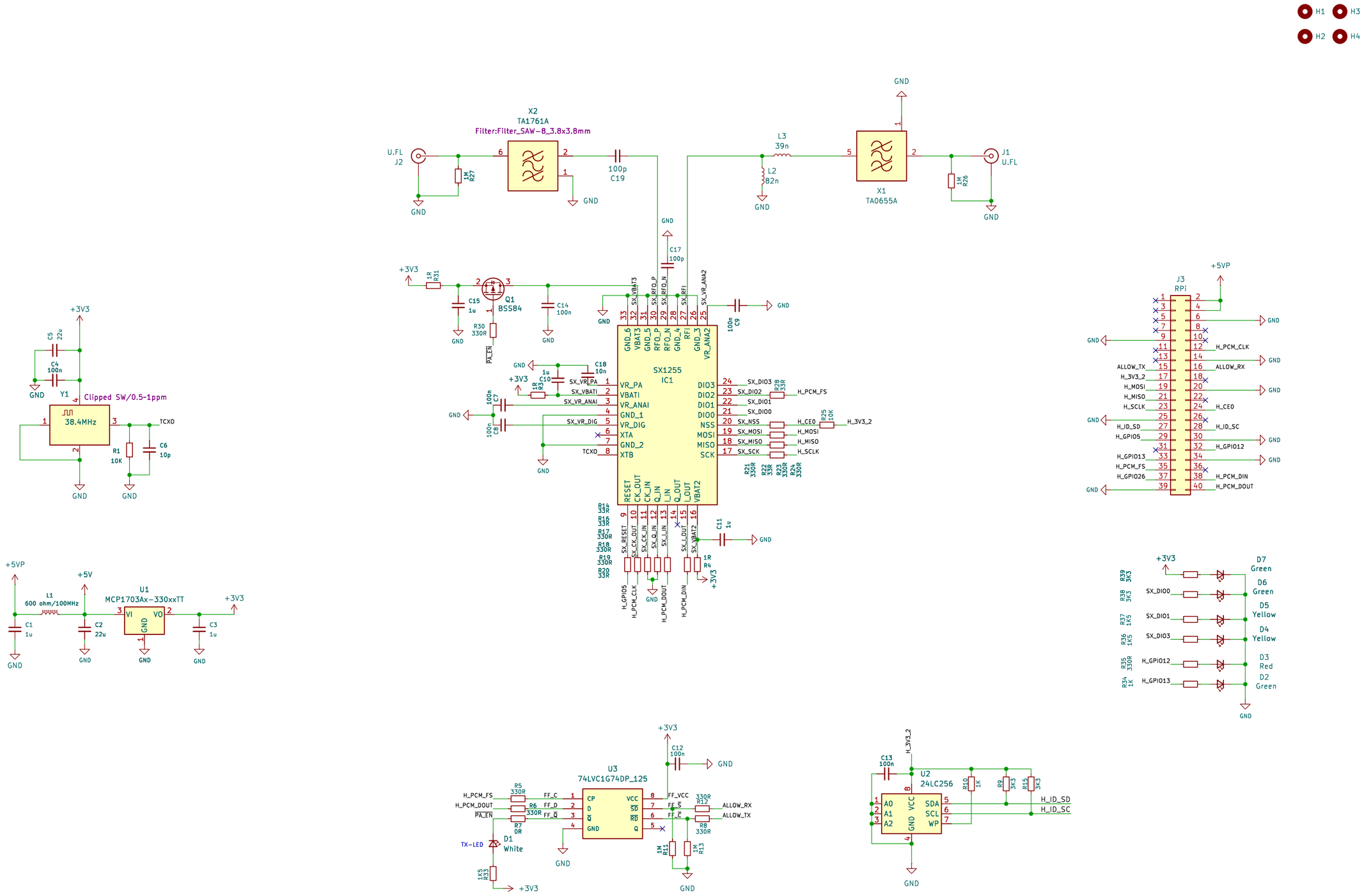

Modified SXceiver

Z32IT

Sheet: /

File: HAT-mini with BPF.kicad_sch

Title: HAT-mini with BPF

Size: A3	Date: 2026-03-19	**Rev: V1.0**
KiCad E.D.A. 9.0.7		Id: 1/1